UNIT	COOLING TOWER			DWG. #	T3TM1224-DRD-ST	REV.	-
MODEL #	AT 110-2J12	SCALE	NTS	SERIAL #		DATE	5/10/2024

EVAPCO, INC.

NOTES:
1. (M)- FAN MOTOR LOCATION
2. HEAVIEST SECTION IS UPPER SECTION
3. MPT DENOTES MALE PIPE THREAD
   FPT DENOTES FEMALE PIPE THREAD
   BFW DENOTES BEVELED FOR WELDING
   GVD DENOTES GROOVED
   FLG DENOTES FLANGE
4. +UNIT WEIGHT DOES NOT INCLUDE ACCESSORIES (SEE ACCESSORY DRAWINGS)
5. MAKE-UP WATER PRESSURE 20 psi MIN [137 kPa], 50 psi MAX [344 kPa]
6. 3/4" [19MM] DIA. MOUNTING HOLES. REFER TO RECOMENDED STEEL SUPPORT DRAWING.
7. DIMENSIONS LISTED AS FOLLOWS:
   ENGLISH FT-IN
   [METRIC] [mm]

Preliminary

FACE C

FACE B

PLAN VIEW

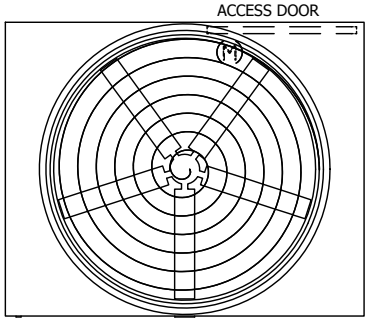

FACE D

FACE A

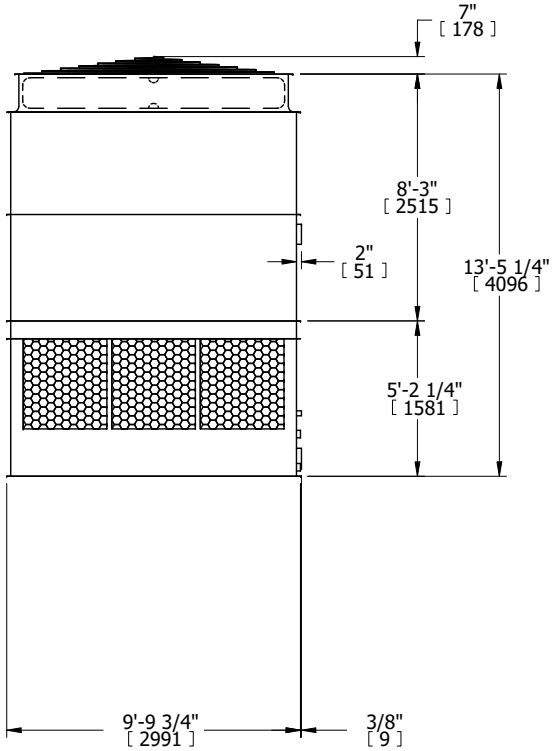

FACE B

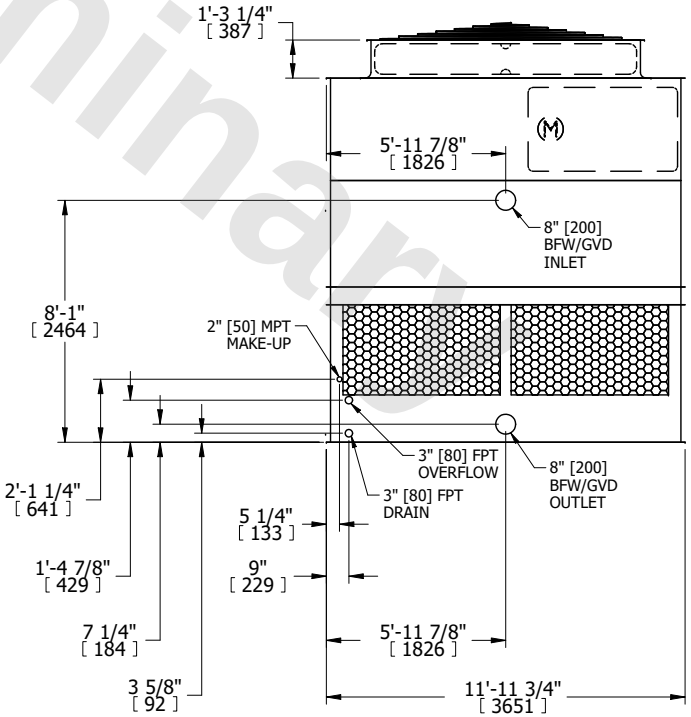

FACE A

SHIPPING WEIGHT	6690 lbs+ [3035] kg+	OPERATING WEIGHT	11650 lbs+ [5285] kg+	HEAVIEST SECTION WEIGHT	4270 lbs+ [1940] kg+	NO. OF SHIPPING SECTIONS	2	DRAWN BY:	JLG